SPECIFICATIONS:
REVERSE FLAME STEAM BOILER
MODEL; TNS800/700 kPa
KILOWATT RATING; 800
CLASS 1 VESSEL AS1228-1997, TABLE 1.6

OPERATING PRESSURE;	700	kPa
DESIGN PRESSURE;	750	kPa
EVAPORATION;	1269	kg/hr
INPUT;	3600	Mj/hr
OUTPUT;	2880	Mj/hr
DIESEL OIL;	92.4	L/hr
L.P.G.;	140.4	L/hr
NATURAL GAS;	92.9	M^3/hr
SHIPPING WEIGHT;	2400	Kg
FLOODED CAPACITY;	1885	Lt

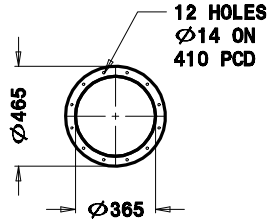

FLUE FLANGE DETAIL

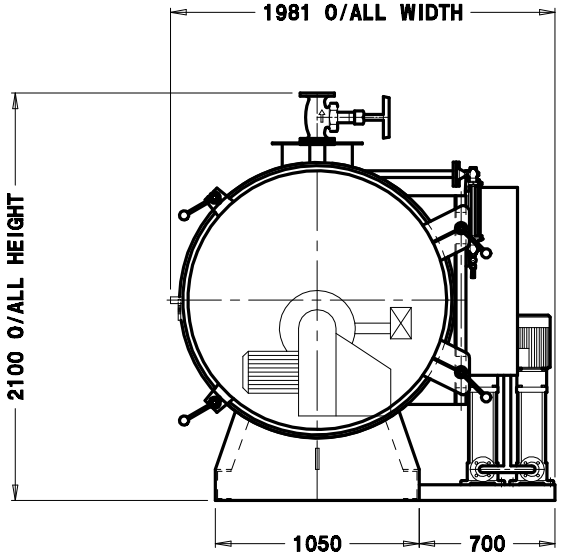

FRONT ELEVATION

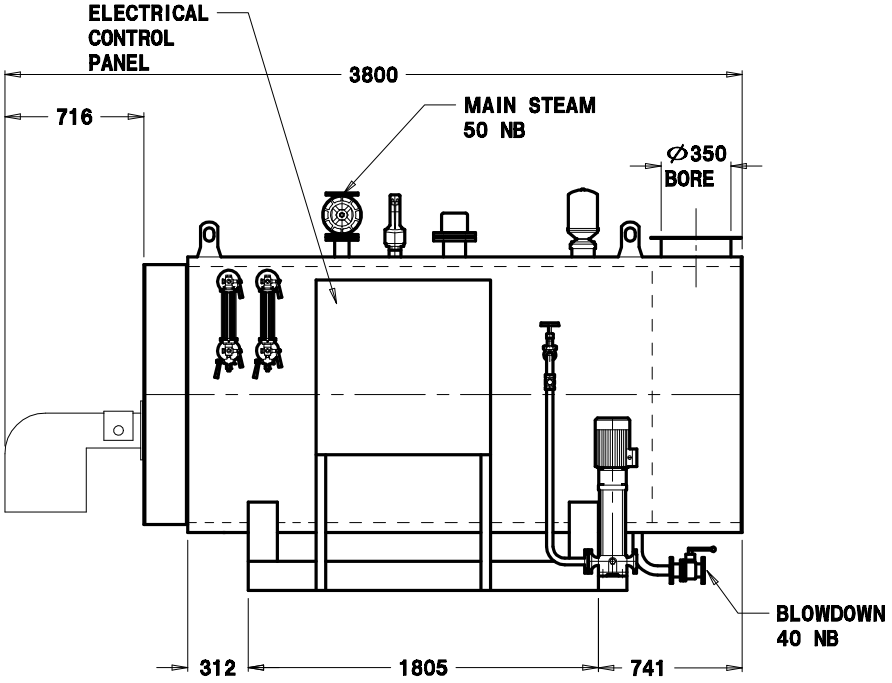

SIDE ELEVATION

NO	REVISION	DATE	CKD
	ORIGINAL ISSUE		

HUNT BOILERS
A division of Forbes (Aust) Pty Ltd

THIS DRAWING WAS PREPARED BY HUNT BOILERS. THE INFORMATION IT CONTAINS IS CONFIDENTIAL AND MUST NOT BE USED, DISCLOSED OR REPRODUCED WITHOUT WRITTEN AUTHORITY.

ALL DIMENSIONS IN MILLIMETRES
DO NOT SCALE THIS DRAWING
COMPUTER AIDED DRAFT

DRAFT P.C.H.
DATE 16/05/01
PASSED **

TITLE/PART TNS SERIES TNS0800 REVERSE FLAME STEAM BOILER
PART # TNS0800GA
A4