Filename & path: P:/Boiler Drawings/Hunt WT Boilers/Brochures/WT-18-GA.prt

Design Data:

Design Code Reference:	AS1228-1997
Vessel class:	One
Rated Output:	18 MW (18000 kW)
Design Pressure:	1200 kPa (12 bar)
Hydrostatic test pressure:	1800 kPa
Transport Mass:	34.4 Tonne
Flooded Mass:	51.5 Tonne

Top drum OD:	1067
Bottom drum OD:	762
Downcomer OD:	220
Insulation:	50mm Rockwool

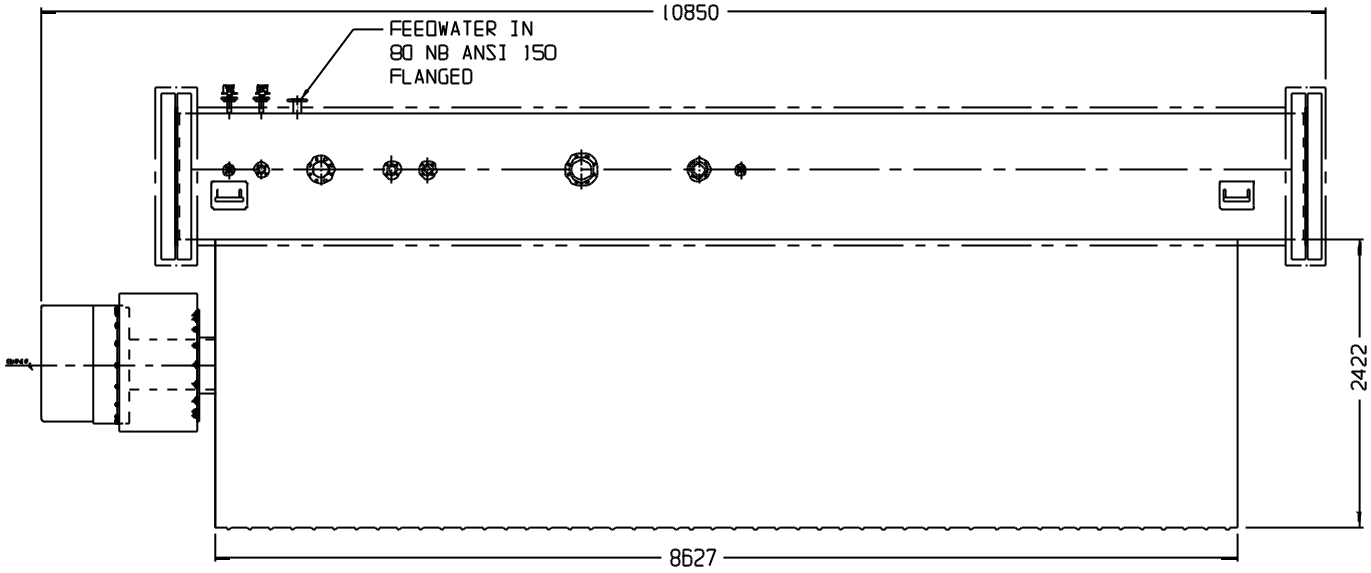

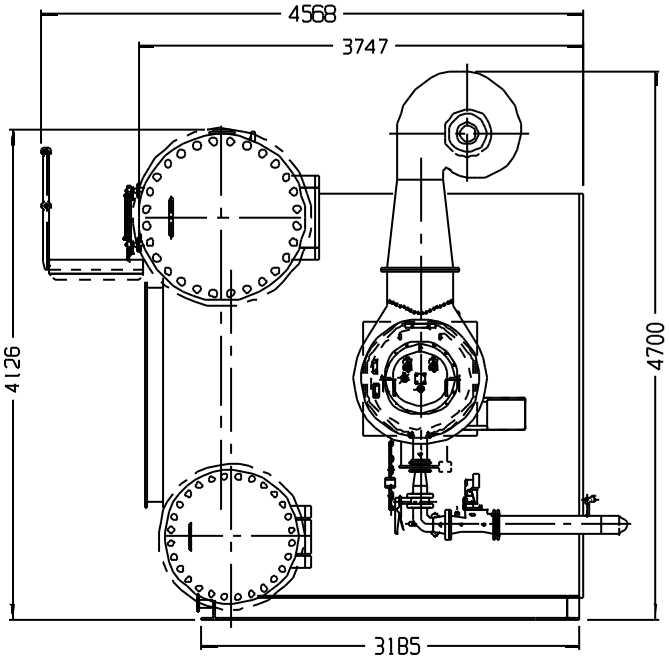

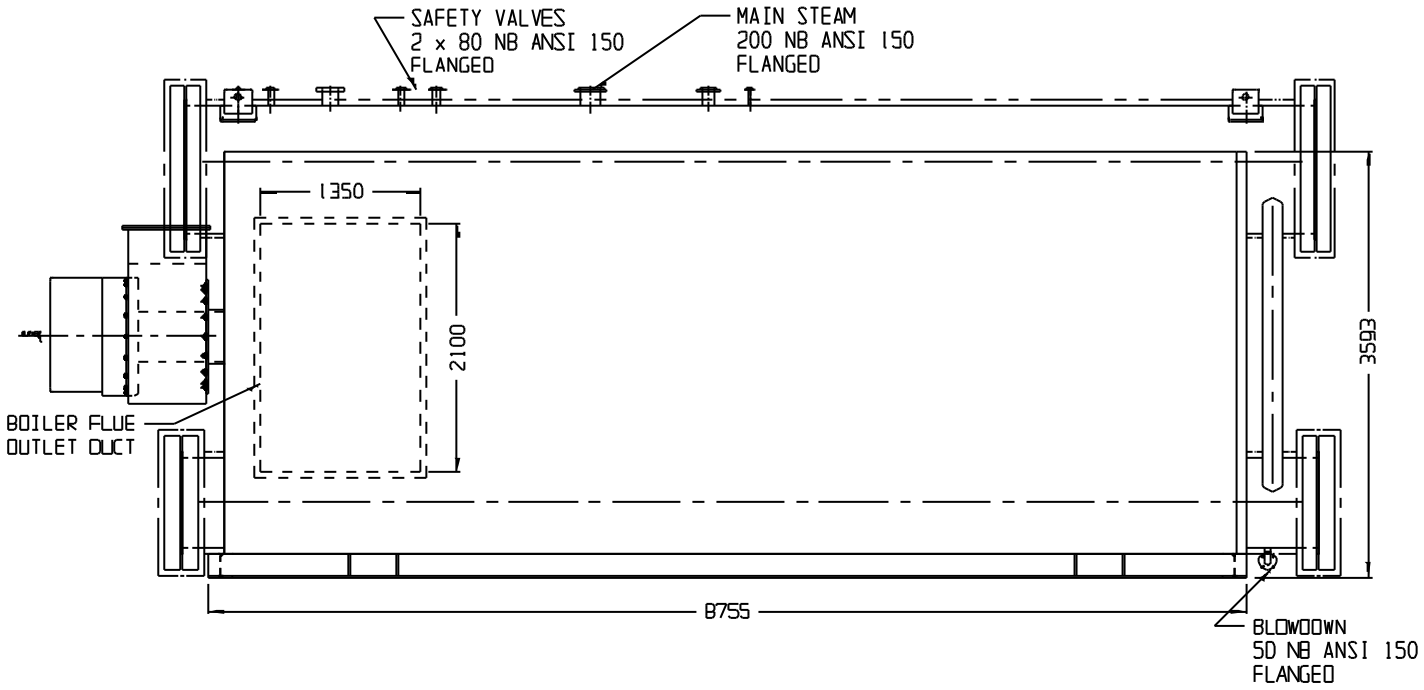

NO	REVISION	DATE	CKD
0	Original issue		

THIRD ANGLE PROJECTION

HUNT BOILERS
A division of Forbes (Aust) Pty Ltd

THIS DRAWING WAS PREPARED BY HUNT BOILERS. THE INFORMATION IT CONTAINS IS CONFIDENTIAL AND MUST NOT BE USED, DISCLOSED OR REPRODUCED WITHOUT WRITTEN AUTHORITY.

ALL DIMENSIONS IN MILLIMETRES
DO NOT SCALE THIS DRAWING
COMPUTER AIDED DRAFT

DRAFT P.C.H.
DATE 19/02/04
PASSED J.T.

TITLE/PART
Hunt WT-18MW
Water tube steam boiler
General Arrangement

PART # WT-18-GA

A4